MODEL NO. P30-4752

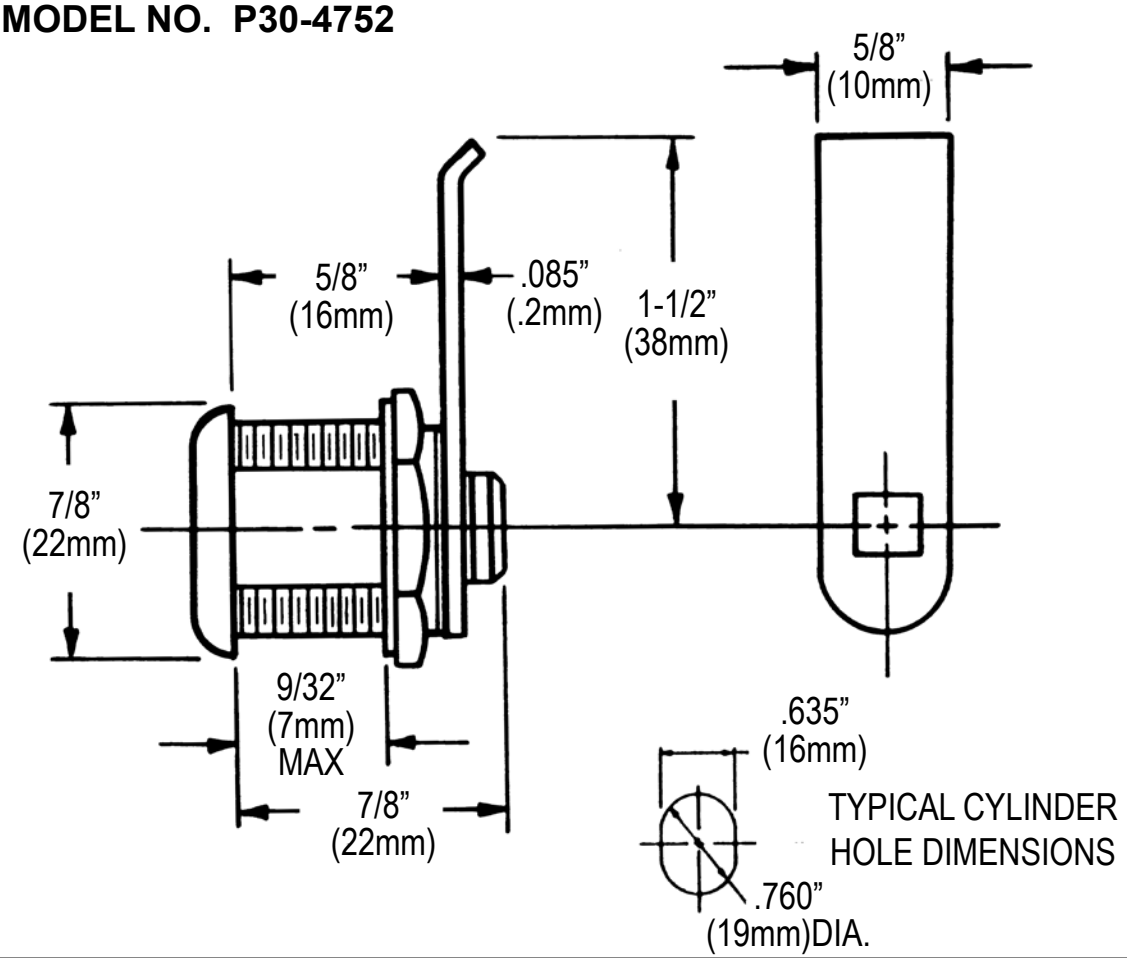

1890 Swarthmore Ave, PO Box 2020, Lakewood, NJ 08701, phone 732-363-4700, 800-526-3694, fax 732-364-8110
www.chgusa.com